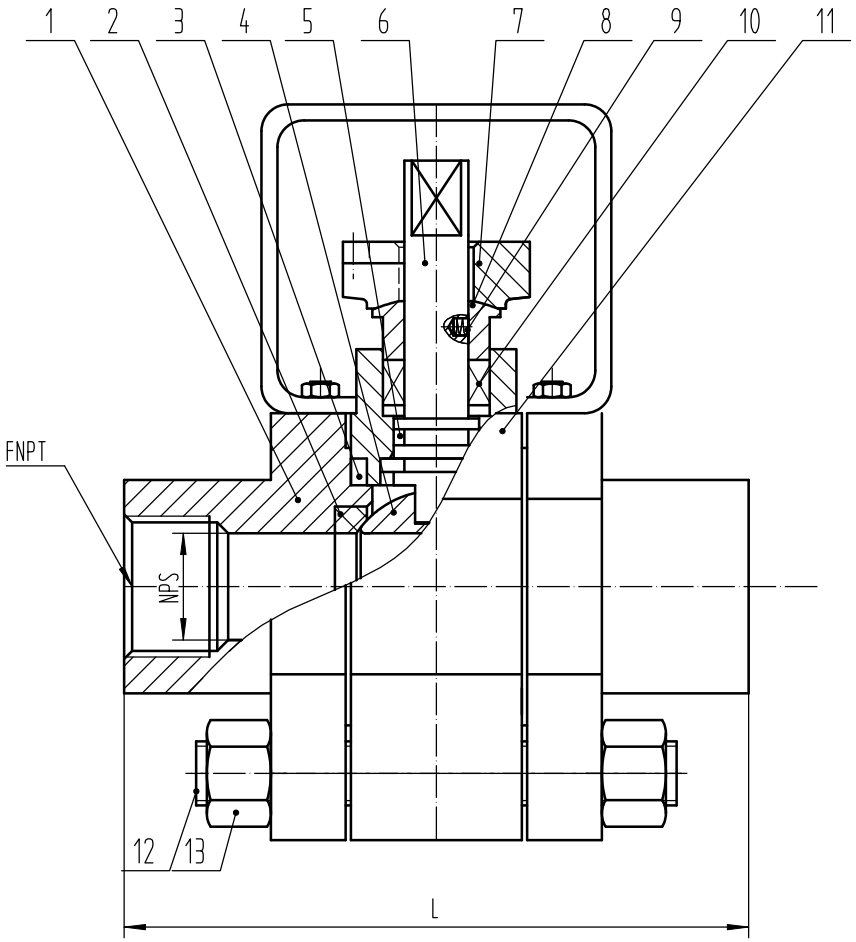

Features:

1. Design standard:ASME B16.34
2. Face to face:As MFR std.
3. Thread ends:ASME B1.20.1
3. Test& inspection:API 598

BODY MARKING

WSV
SIZE
RATING
MATERIAL
HEAT NO.

SPECIFICATION			
Pressure	2000PSI		
Pressure test	Shell(hydrostatic)	20.7	WOG
	Seat(hydrostatic)	15.2	
	Seat (air test)	0.6	
Application Temp.	-29° C~ 120° C		

NO.	CODE	MAIN PARTS	QTY	MATERIAL	REMARKS
13	GB6170-86	Hex nut	/	SS316	
12	GB901-88	Stud	/	SS316	
11	Q11F-2000PSI-07	Body	/	A182 F53	
10	WSV004-2008	Packing	/	Graphite	
9	WSV003-2008	Anti-static device(Spring)	/	Inconel X750	
8	Q11F-2000PSI-06	Gland bushing	/	A182 F53	
7	Q11F-2000PSI-05	Gland flange	/	A351 CF8M	
6	Q11F-2000PSI-04	Stem	/	A182 F53	
5	WSV024-2008	O ring	/	Viton	
4	Q11F-2000PSI-03	Ball	/	A182 F53	
3	WSV001-2008	Gasket	/	F53+graphite	
2	Q11F-2000PSI-02	Seat	/	PTFE	
1	Q11F-2000PSI-01	Bonnet	/	A182 F53	

Main Dimension(mm)

Item Code	L	FNPT
Q11F-2000SPI-1/2″	108	1/2″
Q11F-2000SPI-3/4″	117	3/4″
Q11F-2000SPI-1″	127	1″
Q11F-2000SPI-1-1/4″	140	1-1/4″
Q11F-2000SPI-1-1/2″	165	1-1/2″
Q11F-2000SPI-2″	178	2″

G	W	L	Q	0	20181230
SALES	DRAWN	ASSESS	AUTHORIZE	REV.	DATE
DRW. NO.	Q11F-2000PSI		Ref.No.	G1811-065	
NOTES	PO.45571				
WEIDOULI VALVES CO.,LTD.					

DESCRIPTION

3PC BALL VALVE
NPT ENDS, 2000PSI
BARE SHAFT WITH BRACKET
SUPER DUPLEX 2507

DRAWING

WSV®
Weidouli special valve