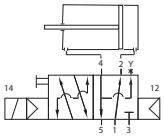

MNH 350 701 on double acting act.

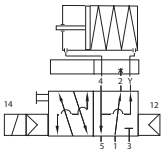

MNH 350 701 and Flex-Pack FP 701 on single acting act.

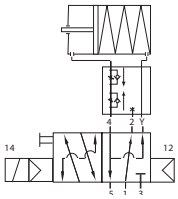

MNH 350 701 and Flex-Regulator DRF 3 601 on single acting act.

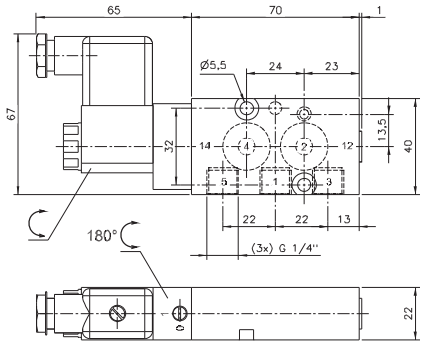

MNH 350 701/MNH 351 701
MNH 350 701 NPT/MNH 351 701 NPT

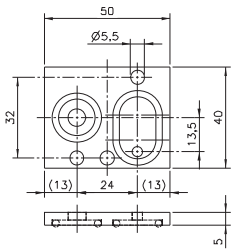

FP 701 K/FP 701 A

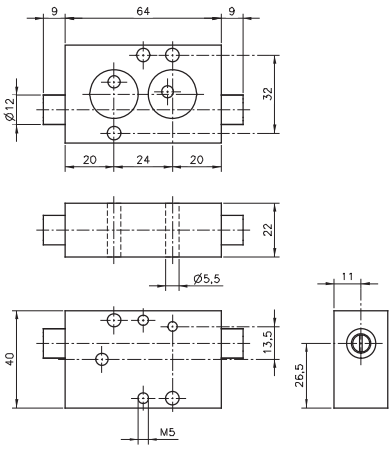

DRF 3 601

5/2-way solenoid valve, actuated by permanent signal. Interface according to 1/4“ Namur standard. Adding the **„Flex-Pack“**, converts the valve into a 3/2-way-Namurvalve with exhaust-air recirculation (“purge”).

MNH 350 701 with pneumatic spring return, MNH 351 701 with combined spring.

Valves are available with solenoid operators: 230V/50Hz, 110V/50Hz, 24V/50Hz, 48V=, 24V=, 12V=

Valves are generally equipped with manual override.

Delivery of valve includes 1 pin, 2 screws, 2 O-rings.

Instead of the Flex-Pack the **„Flex-regulator“** Type DRF 601 converts the function of the valve and offers the possibility to control opening- and closing-speed of a spring-return actuator independently.

Delivery of FP 701 and DRF 3 601 includes longer screws, seals as well as a plug to close port 3 of the valve.

Type	Material	Orifice 4	Orifice 2-3	Weight
FP 701 K	PA	7 mm	4 mm	0,012 kg
FP 701 A	alu	7 mm	4 mm	0,016 kg
DRF 3 601	alu + brass	0,5 - 6 mm	4 mm	0,18 kg

Type	Port size	Air flow	Operating press.	Power Cons.	Weight
MNH 350 701	G 1/4”	1250 l/min	2 - 10 bar	3 W = / 5 VA ~	0,24 kg
MNH 351 701	G 1/4”	1250 l/min	2,5 - 10 bar	3 W = / 5 VA ~	0,24 kg
MNH 350 701 NPT	1/4” NPT	1250 l/min	2 - 10 bar	3 W = / 5 VA ~	0,24 kg
MNH 351 701 NPT	1/4” NPT	1250 l/min	2,5 - 10 bar	3 W = / 5 VA ~	0,24 kg