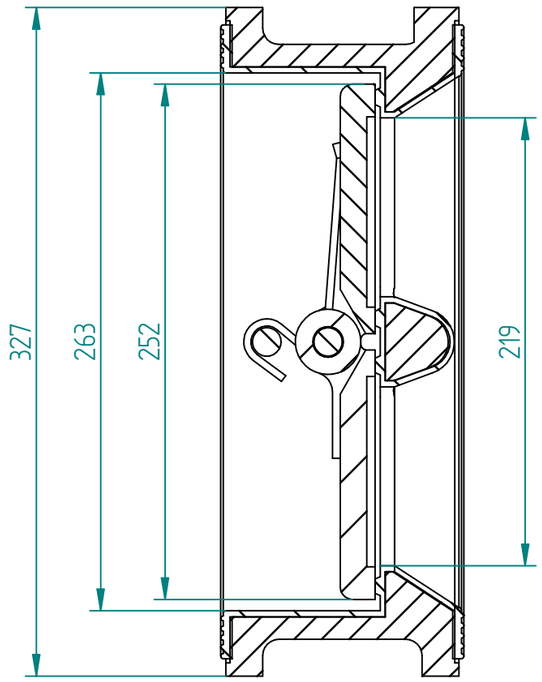

SECTION A-A

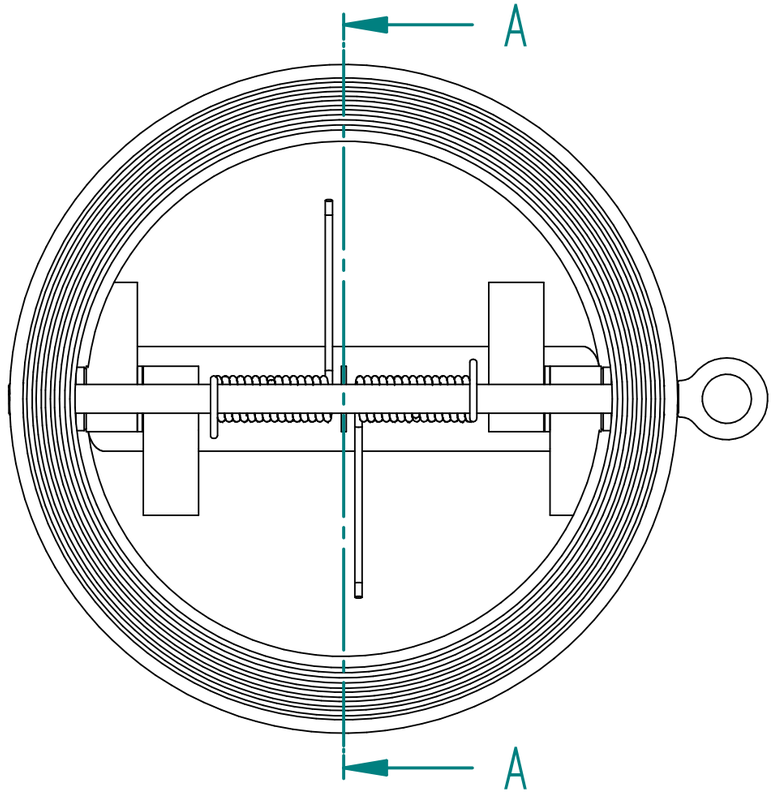

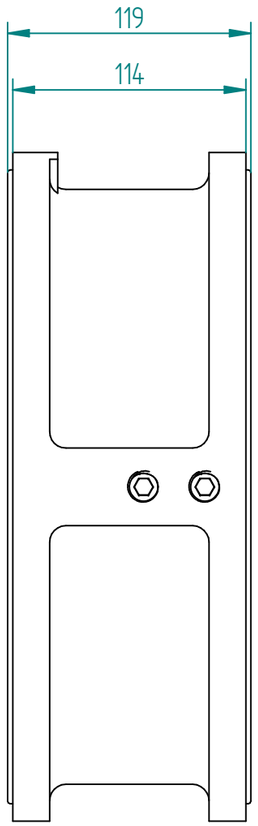

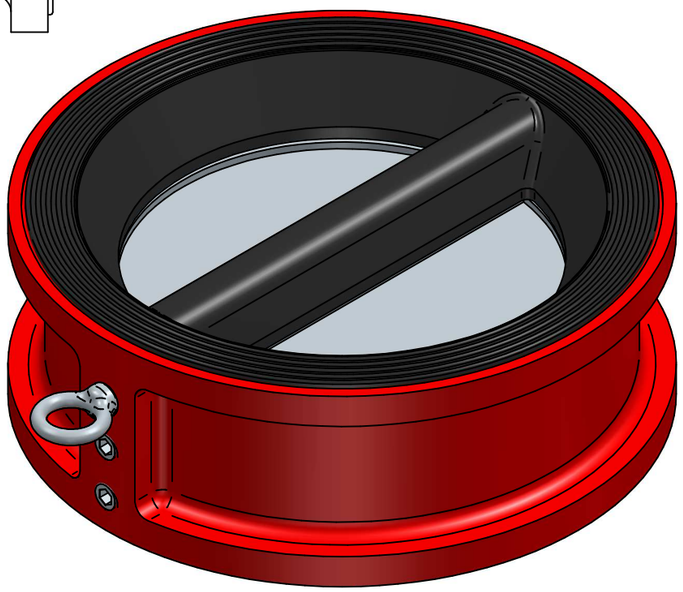

		NAME	DATE	SIZE	DWG NO
J.S.COCK A/S	DRAWN	MOTO	28.08.2017	A3	QIF-180-021-0250
	CHECKED	TOCO	28.08.2017	FILE NAME:	QIF-180-021-0250.dft
TITLE RUBBER COATED DUAL CHECK VALVE DN250, DI BODY, AL.BR. DISC, STAINLESS STEEL 316 SHAFT, EPDM	ENG APPR	TOCO	28.08.2017	SCALE: 1:3	REV: .....
	MGR APPR	TOCO	28.08.2017	WEIGHT:	SHEET:

UNLESS OTHERWISE SPECIFIED DIMENSIONS ARE IN MILLIMETERS AND TOLERANCES ARE +/-0,5

REV	DESCRIPTION	DATE	APPROVED

REVISION HISTORY