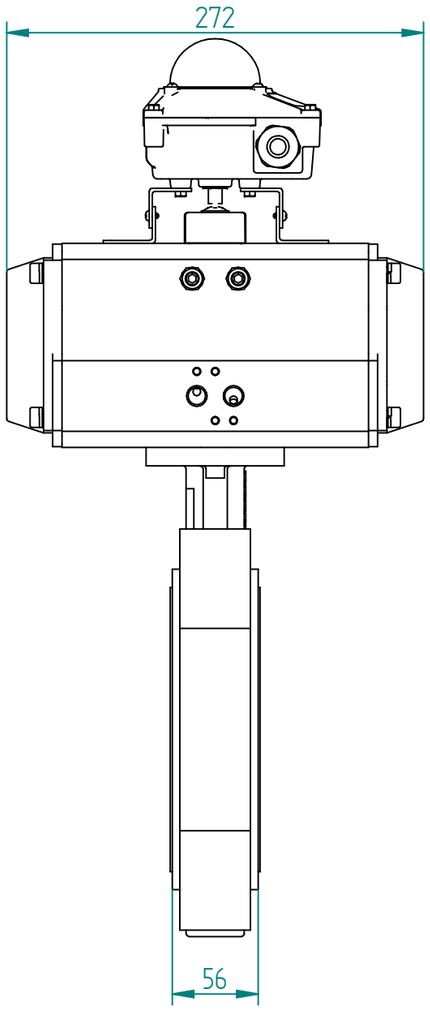

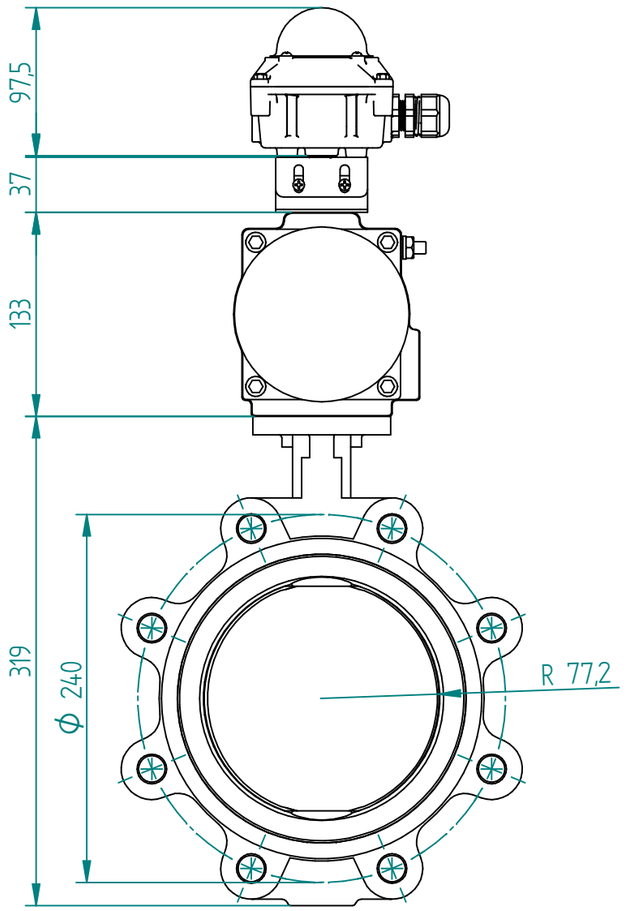

POS	Item Number	Description
1	QIF-110-011-0150	LT BUTTERFLY VALVE GGG40 DN150 LUG PN10/16
2	NUTNKD-105	PNEUMATIC ACTUATOR Double Acting 231NM AT 7BAR
3	NUTNTS-CP10	SWITCHBOX, ALUMINIUM ALLOY+EPOXY COATED BODY
4	NUTGLD-M20	CABLE GLAND M20×1.5, WATERPROOF TYPE IP68
5	NUTMUF-SD-6	SD TYPE OF TIMING MUFFLER, SD-6, BSPP 1/8"

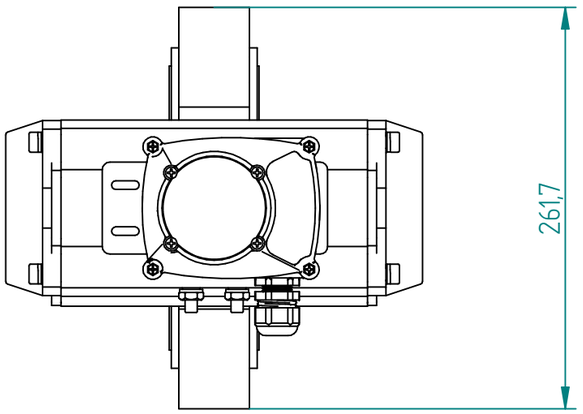

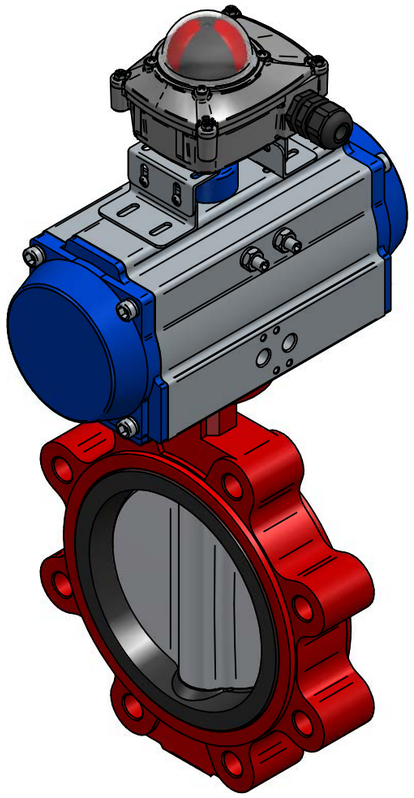

		NAME	DATE	SIZE	DWG NO
J.S.COCK A/S	DRAWN	RAGA	2/1/2024	A3	QIF-111-NDA-0150E
	CHECKED	ORLA	dd.mm.yyyy	FILE NAME: QIF-111-NDA-0150E.dft	
TITLE LUG BUTTERFLY VALVE DN150 PN10 WITH DA ACTUATOR AND SWITCHBOX	ENG APPR	TOCO	dd.mm.yyyy	SCALE: 1:4	REV: 01
	MGR APPR	TOCO	dd.mm.yyyy	WEIGHT:	SHEET: 1 OF 1

UNLESS OTHERWISE SPECIFIED DIMENSIONS ARE IN MILLIMETERS AND TOLERANCES ARE +/-0,5

REV	DESCRIPTION	DATE	APPROVED

REVISION HISTORY