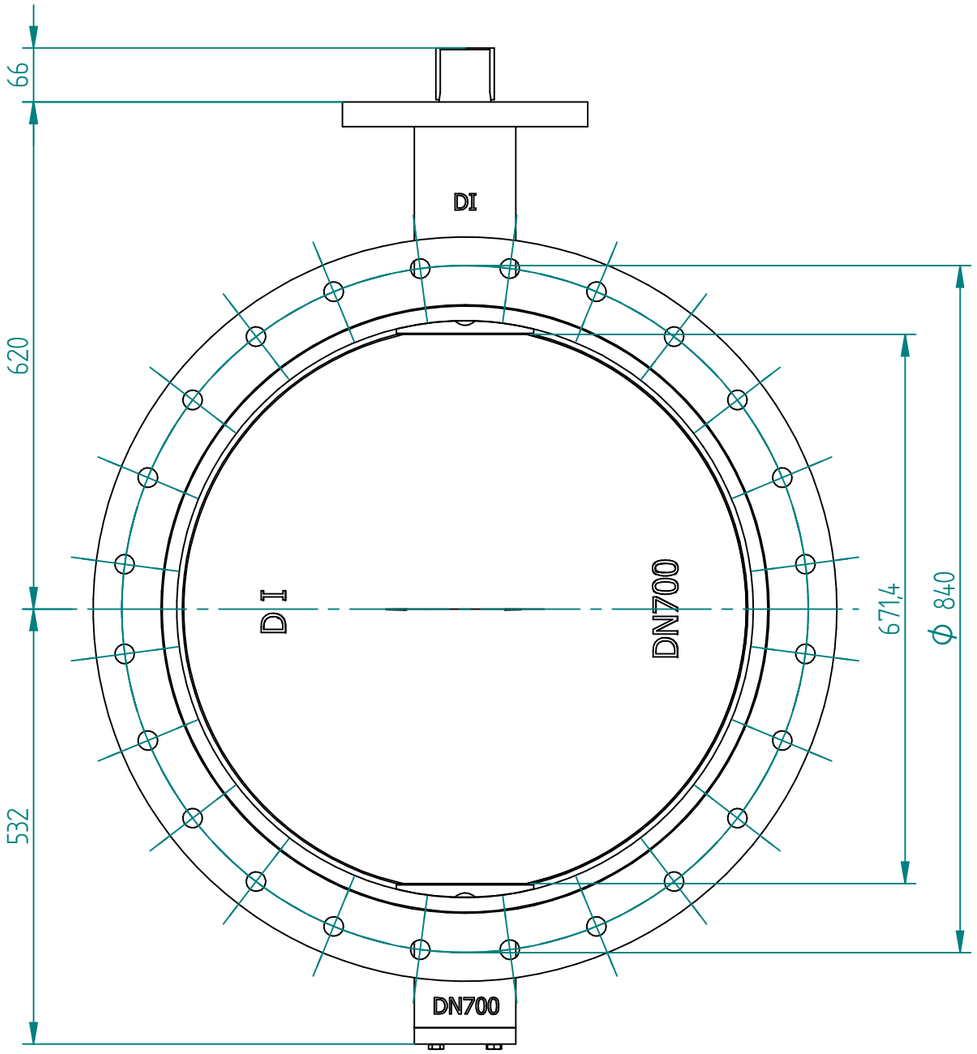

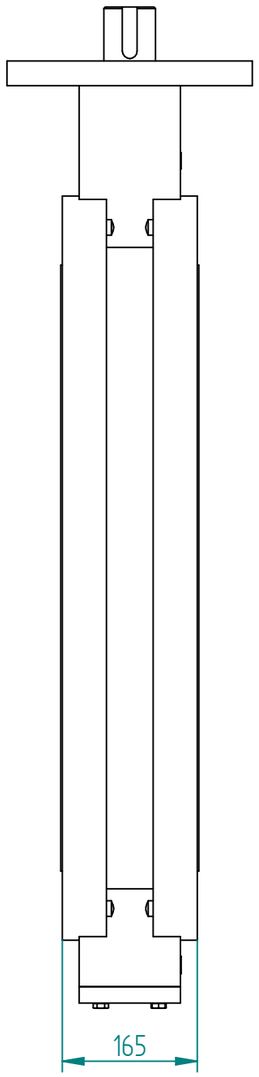

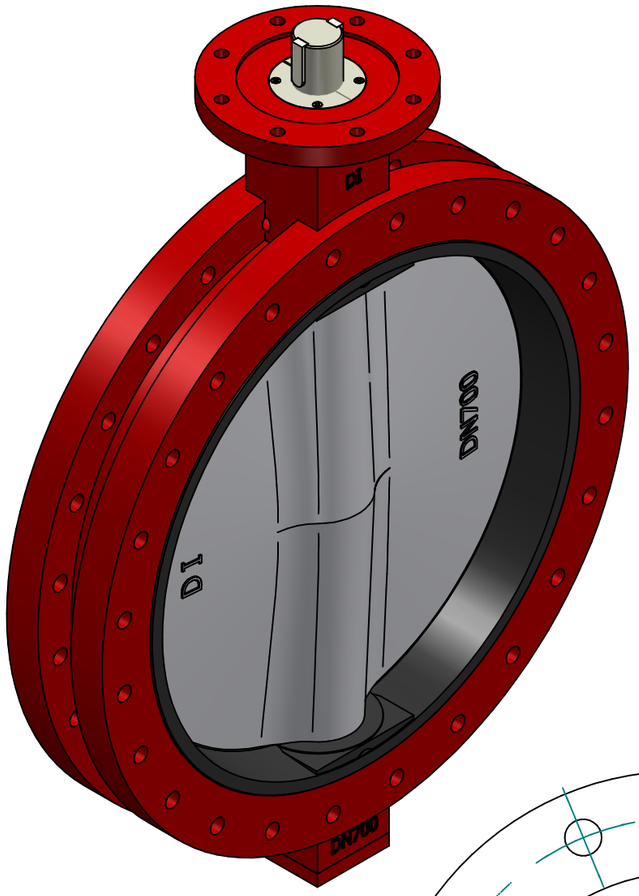

No.	Part Name	Material
1	Body	GGG40
2	Disc	DI+Nylon11
3	Shaft	SS416
4	Seat	EPDM

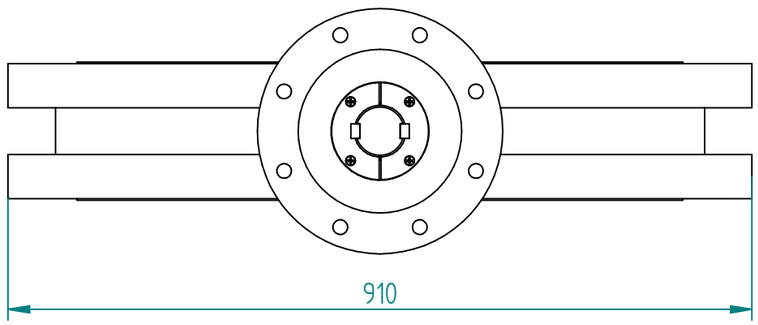

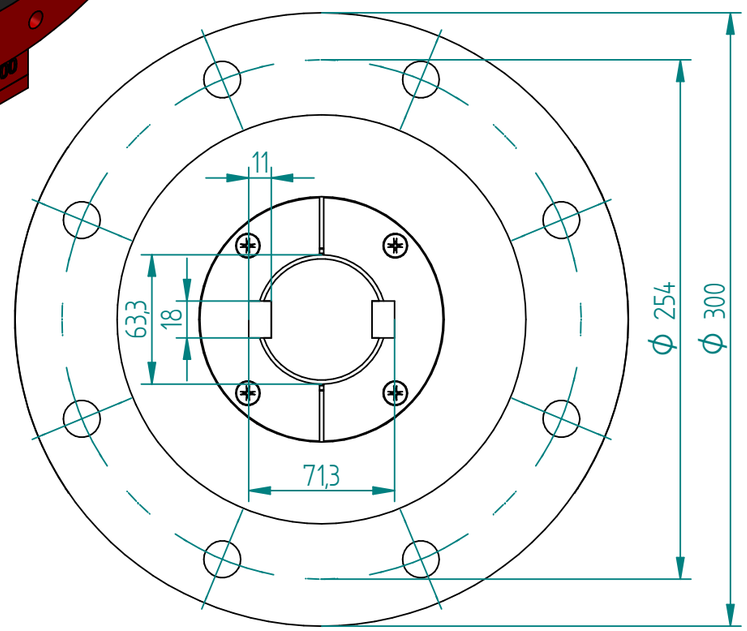

1:3 Top Plate

J.S.COCK A/S

TITLE BUTTERFLY VALVE
LUG-DOUBLE FLANGE DN700 / PN10

	NAME	DATE	SIZE	DWG NO
DRAWN	MOTO	09.04.2021	A3	QIF-110-011-0700
CHECKED	ORLA	dd.mm.yyyy	FILE NAME: QIF-110-011-0700.dft	
ENG APPR	TOCO	dd.mm.yyyy	SCALE: 1:7,5	REV: 02
MGR APPR	TOCO	dd.mm.yyyy	WEIGHT: 320 kg	SHEET: 1 OF 1

UNLESS OTHERWISE SPECIFIED DIMENSIONS ARE IN MILLIMETERS AND TOLERANCES ARE +/-0,5

REV	DESCRIPTION	DATE	APPROVED
02	UPDATED GA HEIGHT	09.04.2021	MOTO
01	UPDATED FACE TO FACE	23.11.2020	ORLA
00	ISSUE	29.09.2017	RESO

REVISION HISTORY