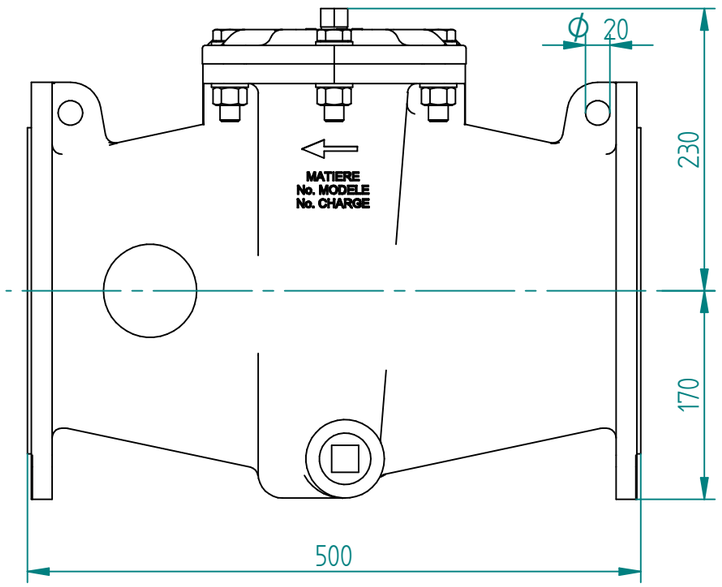

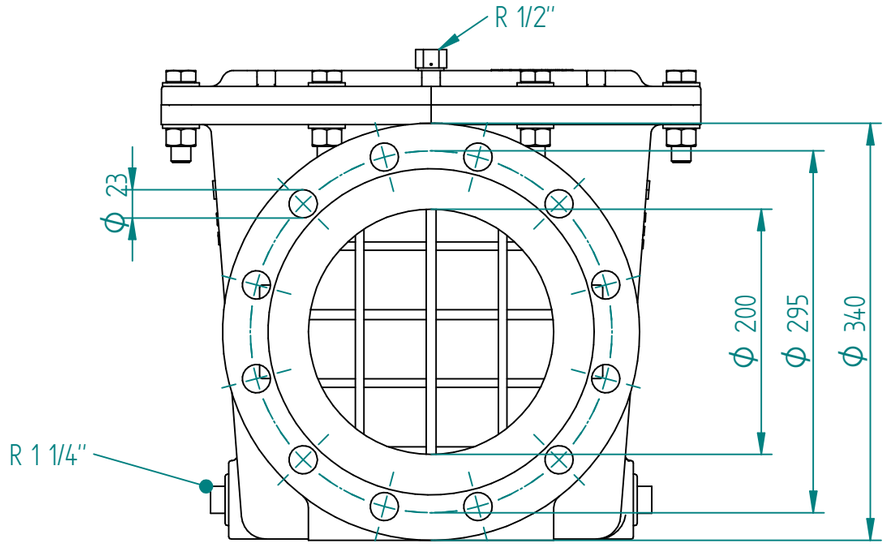

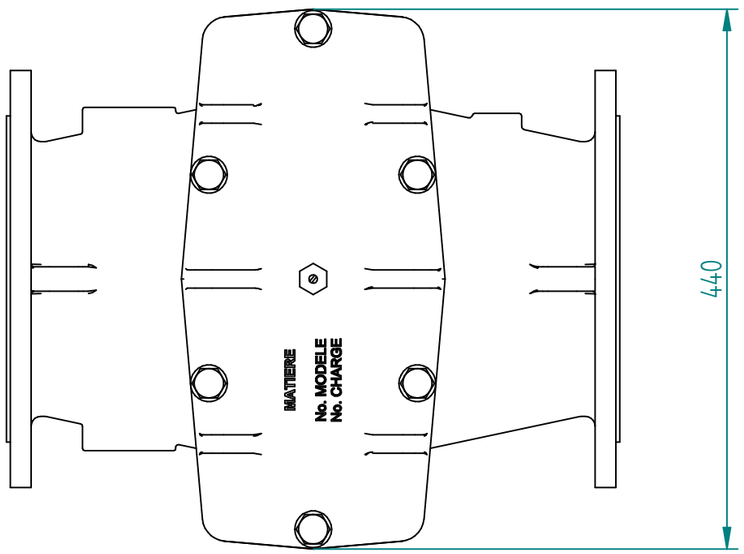

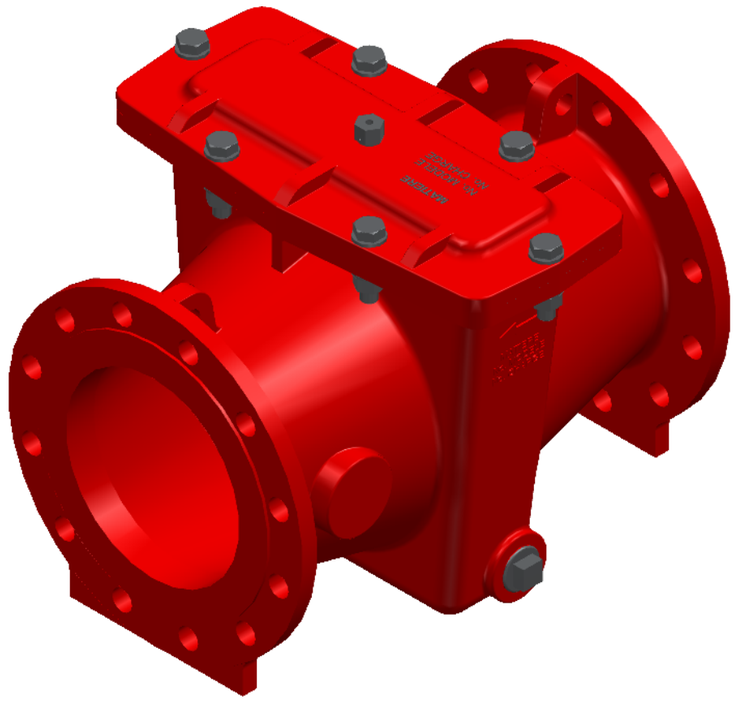

		NAME	DATE	SIZE	DWG NO
J.S.COCK A/S	DRAWN	RAGA	10/24/2023	A3	CLA00108
	CHECKED	TOCO	dd.mm.yyyy	FILE NAME: CLA00108.dft	
TITLE FILTER H 90-501 DN 200 PN 10 BODY: GGG40 FILTER: SS316 L: 500 MM EPOXY COATED	ENG APPR	TOCO	dd.mm.yyyy	SCALE: 1:5	REV: 00
	MGR APPR	TOCO	dd.mm.yyyy	WEIGHT: 76 kg	SHEET: 1 OF 1

UNLESS OTHERWISE SPECIFIED DIMENSIONS ARE IN MILLIMETERS AND TOLERANCES ARE +/-0,5

REV	DESCRIPTION	DATE	APPROVED

REVISION HISTORY