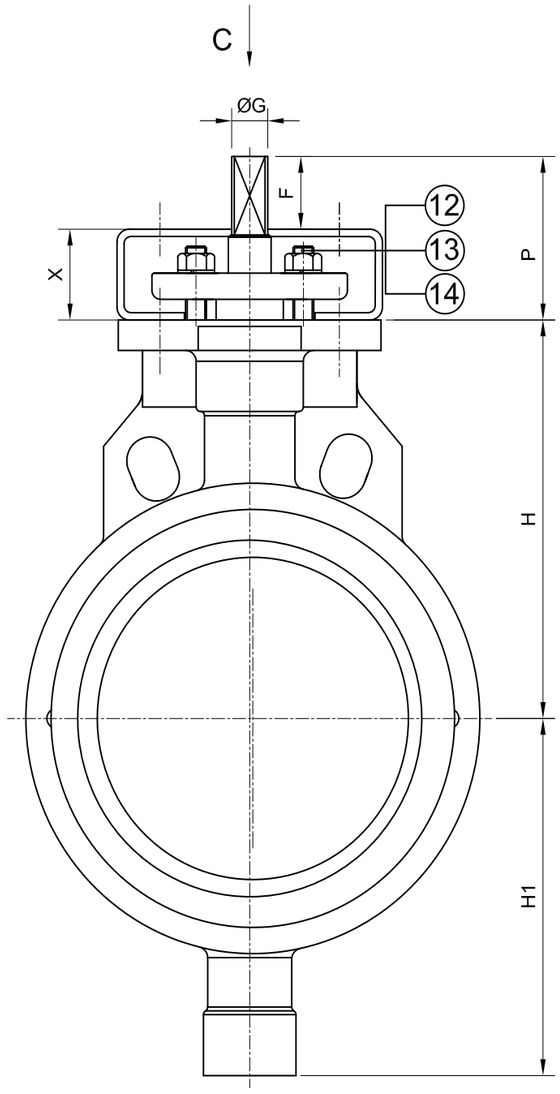


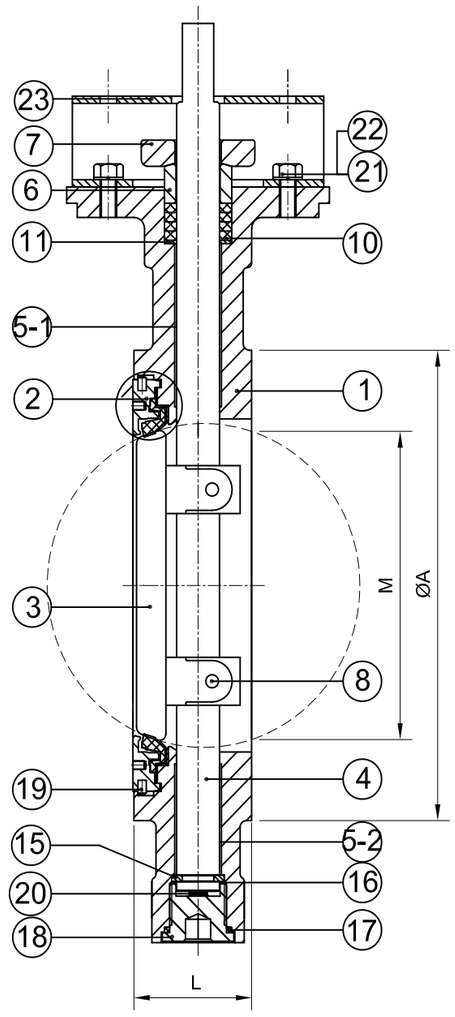


SOFT SEAT

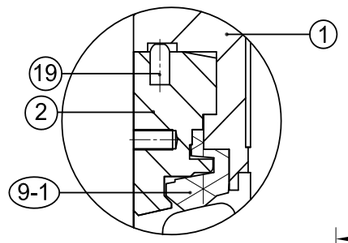


View C

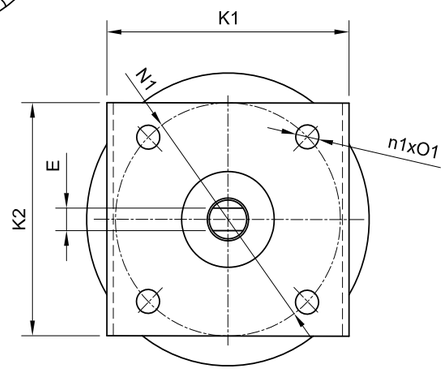


Technical Specfication:

1.Valve: High Performance Butterfly
2.Design STD: EN593
3.Face to Face: Client Offer
4.Flange Connection: EN1092-1(PN16)
5.Top Flange: ISO5211
6.Max.W.P.(Bar): 16bar
7.W.T.Range(° C) : RPTFE(-40~230° C)
8.Test STD: EN12266-1

* * * * * * *

| DN | ØA | ØG | E | F | H | H1 | K1 | K2 | L | N1 | n1xO1 | P | X | M |
|---|---|---|---|---|---|---|---|---|---|---|---|---|---|---|
| 65 | 122 | 16 | 11 | 32 | 123 | 101 | 90 | 70 | 48 | 70 | 4xØ9.6 | 82 | (50) | 61.49 |
| 80 | 132 | 16 | 11 | 32 | 133 | 107 | 90 | 70 | 48 | 70 | 4xØ9.6 | 82 | (50) | 74.38 |
| 100 | 156 | 16 | 11 | 32 | 155 | 115 | 90 | 70 | 52 | 70 | 4xØ9.6 | 82 | (50) | 93.47 |
| 125 | 188 | 19 | 13 | 32 | 173 | 155 | 110 | 100 | 57 | 70 | 4xØ9.6 | 77 | (45) | 119.34 |
| 150 | 216 | 19 | 13 | 32 | 183 | 164 | 110 | 100 | 57 | 70 | 4xØ9.6 | 77 | (45) | 138.39 |
| 200 | 268 | 22 | 16 | 32 | 218 | 195 | 140 | 120 | 61 | 125 | 4xØ13.5 | 92 | (60) | 189.79 |

| POS.No. | ITEM | QTY | PART NAME | MATERIAL | SIZE/DWG.No. | REMARKS/STD. |
|---|---|---|---|---|---|---|
| | 23 | 1 | Bracket | S32750 | | |
| | 22 | 4 | Spring Washer | S32750 | | |
| | 21 | 4 | Bolt | S32750 | | |
| | 20 | 1 | Anti-Static Spring | Inconel X-750 | | |
| | 19 | 2 | Stop Pin | S32750 | | |
| | 18 | 1 | Botton Plug | Gr.5A | | |
| | 17 | 1 | Packing Ring | GRAPHITE | | |
| | 16 | 3 | Distance Ring | S32750 | | |
| | 15 | 1 | Lock Ring | S32750 | | |
| | 14 | 2 | Nut | S32750 | | |
| | 13 | 2 | Spring Washer | S32750 | | |
| | 12 | 2 | Stud | S32750 | | |
| | 11 | 1 | Packing Rester | S32750 | | |
| | 10 | 4 | Packing | GRAPHITE | | |
| | 9-1 | 1 | Soft Seat | RPTFE | | |
| | 8 | 2 | Taper Pin | S32750 | | |
| | 7 | 1 | Packing Gland | Gr.5A | | |
| | 6 | 1 | Packing Sleeve | S32750 | | |
| | 5-2 | 1 | Bearing Bush(Down) | S32750+RPTFE | | |
| | 5-1 | 1 | Bearing Bush(Up) | S32750+RPTFE | | |
| | 4 | 1 | Shaft | F53 | | ASTM A182 |
| | 3 | 1 | Disc | Gr.5A | | ASTM A890 |
| | 2 | 1 | Seat Ring | Gr.5A | | ASTM A890 |
| | 1 | 1 | Body | Gr.5A | | ASTM A890 |
| | 0 | 0 | Assembly | 0 | | |

AFFCO

| ISSUE REV | DATE | SIGN. | DESCRIPTION | APPR. DATE | CHKD. |
|---|---|---|---|---|---|
| 03 | | | | | |
| 02 | | | | | |
| 01 | | | | | |
| 00 | | | | | |

DRWN. BY :Z.C DATE : 31-10-'18
CHKD. BY :M.W DATE : 31-10-'18
APPR. BY :S.C DATE : 31-10-'18
SCALE : AM.PROJ.
SURFACE ROUGHNESS ACCORDING TO ISO-1302

SIZE A3 DN 65-200mm
DRWG. NO. 960006502002B
REV.00

J.S.COCK A/S

| | NAME | DATE | SIZE | DWG NO |
|---|---|---|---|---|
| DRAWN | MOTO | 22.04.2020 | A3 | ALS-110-S960-DN65-200 |
| CHECKED | ORLA | dd.mm.yyyy | FILE NAME: ALS-110-S960-DN65-200.pdf | |
| ENG APPR | TOCO | dd.mm.yyyy | SCALE: 1:5 | REV: ..... |
| MGR APPR | TOCO | dd.mm.yyyy | WEIGHT: | SHEET: 1 OF 1 |

TITLE PN16 HIGH PERF. WAFER D.ECCENTRIC BUTTERFLY VALVE

UNLESS OTHERWISE SPECIFIED DIMENSIONS ARE IN MILLIMETERS AND TOLERANCES ARE +/-0,5

| REV | DESCRIPTION | DATE | APPROVED |
|---|---|---|---|

REVISION HISTORY